WIREMOLD®
Evolution™ Series Floor Boxes

Evolution™ Series – The Next Generation of Floor Boxes

Evolution™ Series Floor Boxes are the latest advancement in the most complete and innovative line of floor solutions in the industry.

In addition to a unique design that allows the same floor box to be used in multiple floor applications, high capacity and multi-functional capabilities make Evolution Series Floor Boxes ideal for areas where large capacity audio/video, power and communication services are needed. Ranging in size from 6- to 10-gangs of capacity, these boxes have completely finished interiors with removable modules that provide easy access for reconfiguring services. Evolution Series Floor Boxes are an ideal option for installations where services are constantly evolving, such as commercial offices, conference rooms, stages, and entertainment venues.

New Evolution Series Floor Boxes provide increased capacity options and a variety of innovations not available in any other floor boxes.

FEATURES & BENEFITS

- **One box many applications.**
  Evolution Series Floor Boxes are designed to work in concrete, raised and wood floor applications and are fully adjustable both pre- and post-concrete pour. A single box can be specified for multiple floor types without having to order additional components or accessories.

Raised Floors

Concrete Floors

Wood Floors

- **Configurable with removable modules.**
  In addition to having removable dividers and a tunnel feature that allows all compartments to be connected, the modules are removable through the top or back of the floor box. This allows for easier installations and facilitates moves, adds and changes without having to disconnect services, saving time and money.

- **Audio/Video Design.**
  Evolution Series Floor Boxes have been developed specifically with the A/V industry in mind. With 3 1/2" - 3 7/8" [89mm x 98mm] of wiring capacity behind each device plate, these boxes will accept devices from leading A/V manufacturers including Extron® Electronics and Crestron®.

- **Durable 180° articulating hinge.**
  Hinge design enables covers to open a full 180° and lie flat on the floor surface with the durability to support a large cover. Provides easy access to all interior modules and activations while reducing tripping hazards.

- **Auto-close egress doors.**
  Cable egress doors lock in position when open, and automatically closes around wires to protect cabling and reduce trip hazards.

- **Accepts standard size wall plates.**
  Evolution Series Floor Boxes accept industry standard single-, double- and triple-gang wall plates from industry leading manufacturers.

- **Finished interior.**
  Fully finished interior removes the unfinished industrial look while increasing visibility, making it easier to see where to plug in devices.

- **Large capacity.**
  6- to 10-gangs of capacity to accommodate power, communications, and A/V devices. A minimum of 5" [127mm] of space between devices providing ample space for hand access when plugging and unplugging into the devices.

- **Suitable for use in air handling spaces.**
  In accordance with Sec 300-22(c) of the National Electric Code.

- **Meets ADA Accessibility Guidelines.**
  Trim flange is designed to meet the ADA Accessibility Guidelines as it pertains to ADA Standard 4.5, which addresses the change in floor and ground surface levels.

- **Multiple size knockouts.**
  All Evolution Series Floor Boxes are available with multiple trade size knockouts ranging in size from 3/4" to 2" allowing for multiple activations and wiring configurations.

- **Die cast aluminum cover assemblies.**
  Evolution Series Floor Box Covers have been designed to work on multiple floor surfaces and are manufactured from die cast aluminum to provide strength and style. Decorative powder coat colors (black, brass, bronze, gray and nickel) will complement any room décor.

- **Cable Management.**
  Allows multiple cables to be organized and controlled for easier cable egress.

- **Furniture Feed.**
  Designed to be installed in concrete, raised and wood floors. Provides large capacity feeds (up to 2"). Trade size knockouts for power, communications and A/V devices.

- **Bare (polished) concrete and terrazzo applications.**
  Evolution Series Floor Box has been designed to be installed into bare (polished) concrete and terrazzo floors.

- **TopGuard™ Protection.**
  Evolution Series Floor Box covers meet and exceed UL scrub water exclusion requirements for tile, carpet, wood, bare concrete and terrazzo floor coverings.

Evolution Series Floor Box Included Components

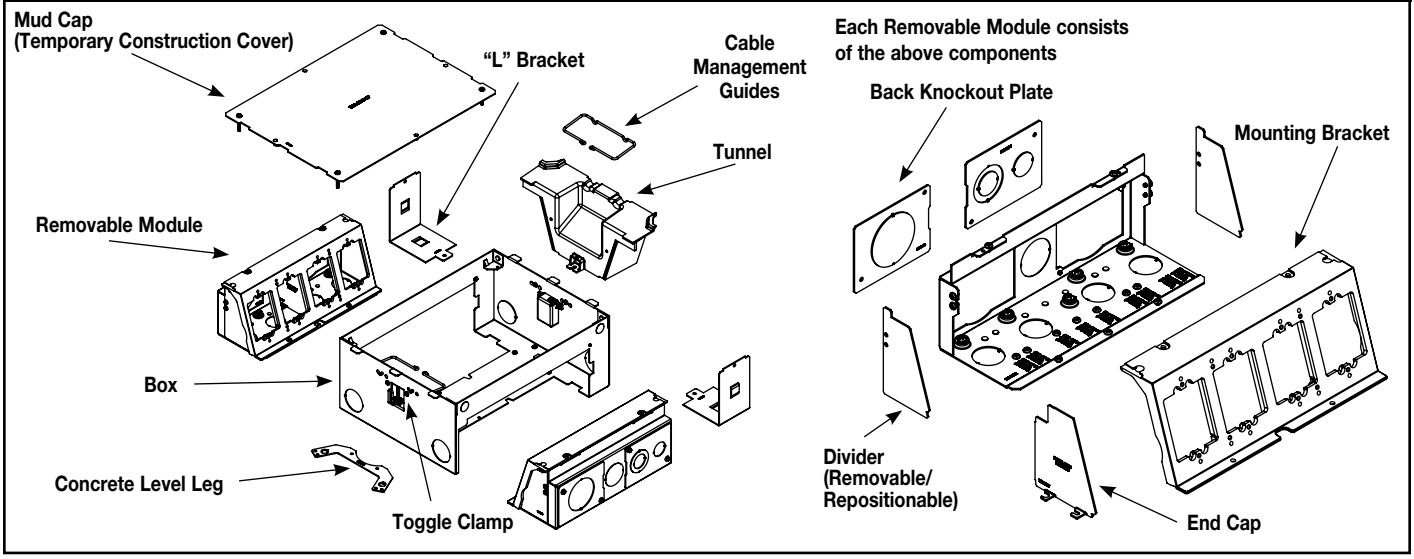

Note: All items shown above are included with Evolution Series Floor Boxes.

Evolution Series Floor Box Model Selection Guide

EVOLUTION FLOOR BOX MODEL	EFB6S	EFB6S-OG	EFB8S	EFB8S-OG	EFB10S	EFB10S-OG	EFBFF	EFBFF-OG
INSTALL FLOOR TYPE: Concrete Floor Raised Floor Wood Floor	 YES YES YES	YES	 YES YES YES	YES	 YES YES YES	YES	 YES YES YES	YES
BOX TYPE:	Standard	On-Grade	Standard	On-Grade	Standard	On-Grade	Furniture Feed	Furniture Feed
BOX CAPACITY:	6-Gangs	6-Gangs	8-Gangs	8-Gangs	10-Gangs	10-Gangs	2-Gangs	2-Gangs
DEPTH BEHIND PLATES:	3 7/8" [98mm]	3 7/8" [98mm]	3 1/2" [89mm]	3 1/2" [89mm]	3 1/4" [81mm]	3 1/4" [81mm]	N/A	N/A
REMOVABLE MODULES:	YES	YES	YES	YES	YES	YES		
DEVICE PLATE SIZE:	Uses Standard Size Device Plates: Single-Gang (2 3/4" x 4 1/2") [70mm x 114mm]		Uses Standard Size Device Plates: Single-Gang (2 3/4" x 4 1/2") Double-Gang (4 9/16" x 4 1/2") Triple-Gang (6 3/8" x 4 1/2") Four-Gang (8 1/8" x 4 1/2")		Uses non-standard size Device Plates (4.652" x 2.302") [117mm x 58mm] Standard Plates: Double-Gang (4 9/16" x 4 1/2")) Triple-Gang (6 3/8" x 4 1/2") Five-Gang (10" x 4 1/2")			
COVERS: COLORS:	EFB610CTC Series, EFB610BTC Series, EFB610CT Series, EFB610BT Series Black, Gray, Brass, Nickel, Bronze						FPFFTC Series Black, Gray, Brass, Nickel, Bronze, Brushed Aluminum	
FLOOR SURFACE:	Carpet, Tile, Wood, Bare (Polished) Concrete & Terrazzo							
KO SIZE RANGE: (Trade Size)	3/4" to 2"	3/4" to 2"	3/4" to 2"	3/4" to 2"	3/4" to 2"	1" to 2"	1/2" to 2"	1/2" to 2"
NOTES:	Covers open full 180°, Slide cable egress doors, Painted interior							

Evolution Series Floor Box Compartment Volumes

MODEL	OUTER COMPARTMENTS (Each)	CENTER COMPARTMENTS (Each)
EFB6 Series	32 in.^{3} [524ml]	38.5 in.^{3} [630ml]
EFB8 Series	27.5 in.^{3} [450ml]	34 in.^{3} [557ml]
EFB10 Series	23.5 in.^{3} [385ml]	27.5 in.^{3} [450ml]
EFBFF Series	64.5 in.^{3} [1056ml]	64.5 in.^{3} [1056ml]

Evolution Series EFB6 Floor Box Ordering Information

Catalog No./Item	Description/Specifications
EFB6S	**6-Gang Floor Box –** has been designed to be installed in concrete floors, raised floors, & wood floor applications. Box has a fully finished interior to assist plugging and unplugging of devices. Designed to work with standard size wall plates. **Box comes complete with all components needed for initial installation.** Box is compatible with Wiremold® Walkerflex Modular Wiring System. Custom options are available upon request. **Country of Origin: USA**

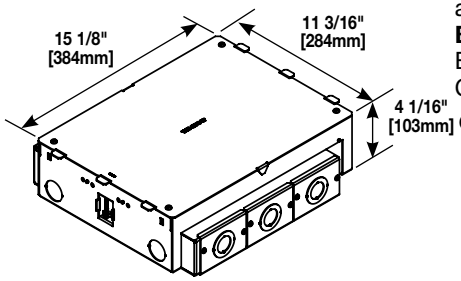

NOTE: For use on bare (polished) concrete or terrazzo floors EFB610-CTR must be used. (Sold separately.)

Components Included:

- **A** Protective/Disposable Cover
- **B** Tunnel System for connecting the two modules of compartments
- **C** Two (2) Removable Modules
- **D** Two (2) Toggle Clamps to secure box to raised and wood floors
- **E** Two (2) Cable Management Guides
- **F** Two (2) Leveling Support Legs for concrete applications
- **G** Trade Size Knockouts ranging in size from 3/4" to 2" trade size
- **H** Two (2) "L" Brackets

Each Module Consists of:

- One (1) EFB6S-MB Mounting Bracket
- One (1) Back Plate
- Two (2) End Caps
- One (1) EFB6S-DIV Divider
- Three (3) 3/4"/1 1/4" Concentric Knockout Plate

Items not included with the box and sold separately:

- Receptacles,
- Communication Jacks
- A/V Devices
- Device plates.

EFB6S Exploded View

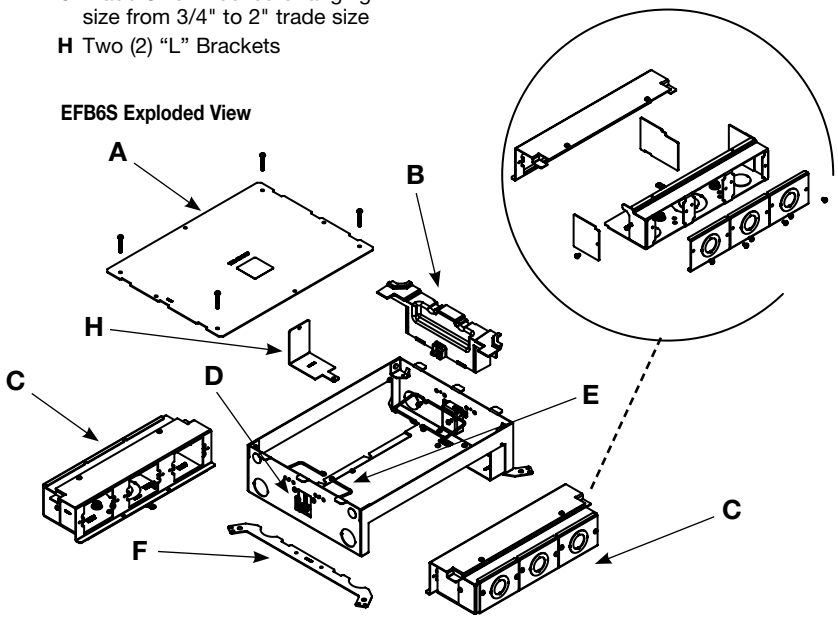

EFB6S Depth Behind Plates

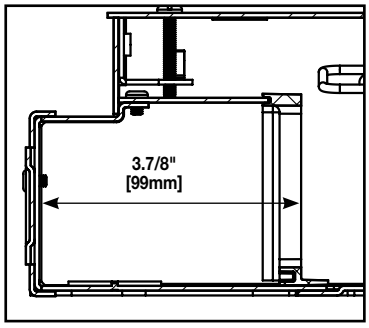

EFB6S Knockout locations & Sizes

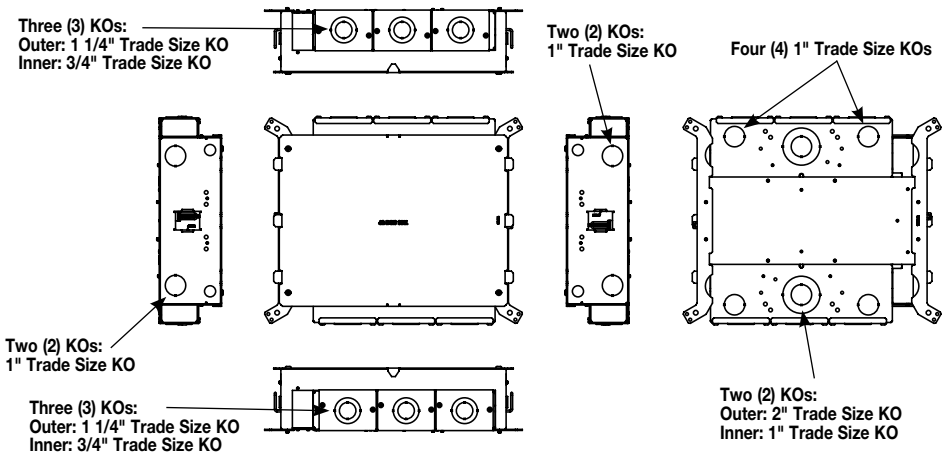

NOTE: Three (3) removable knockout plates per side allow for the EFB6S-2HUB 2" conduit adapter to be installed.

Evolution Series EFB6 Floor Box Ordering Information

Catalog No./Item	Description/Specifications
EFB6S-OG	**6-Gang Floor Box –** has been designed to be installed in both on-grade and above grade concrete floor applications. Box has an epoxy coating that allows the box to be placed in on-grade applications without the need for additional vapor barriers. Designed to work with standard size wall plates. **Box comes complete with all components needed for initial installation.** Custom options are available upon request.

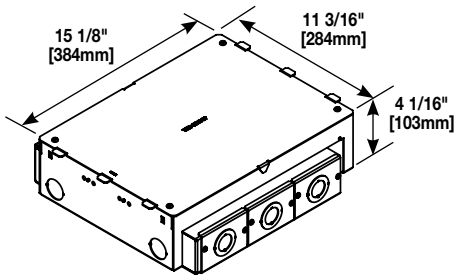

NOTE: For use on bare (polished) concrete or terrazzo floors EFB610-CTR must be used. (Sold separately.)

Country of Origin: USA

Components Included:

- **A** Protective/Disposable Cover
- **B** Tunnel System for connecting the two modules of compartments
- **C** Two (2) Removable Modules
- **D** Two (2) Cable Management Guides
- **E** Two (2) Leveling Support Legs for concrete applications
- **F** Trade Size Knockouts ranging in size from 3/4" to 2" trade size

Each Module Consists of:

- One (1) EFB6S-MB Mounting Bracket
- One (1) Back Plate
- One (1) EFB6S-DIV Divider

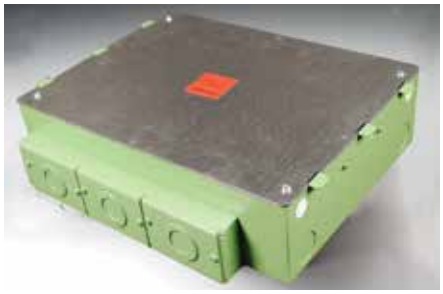

Items not included with the box and sold separately:

- Receptacles,
- Communication Jacks
- A/V Devices
- Device plates.

EFB6S-OG Exploded View

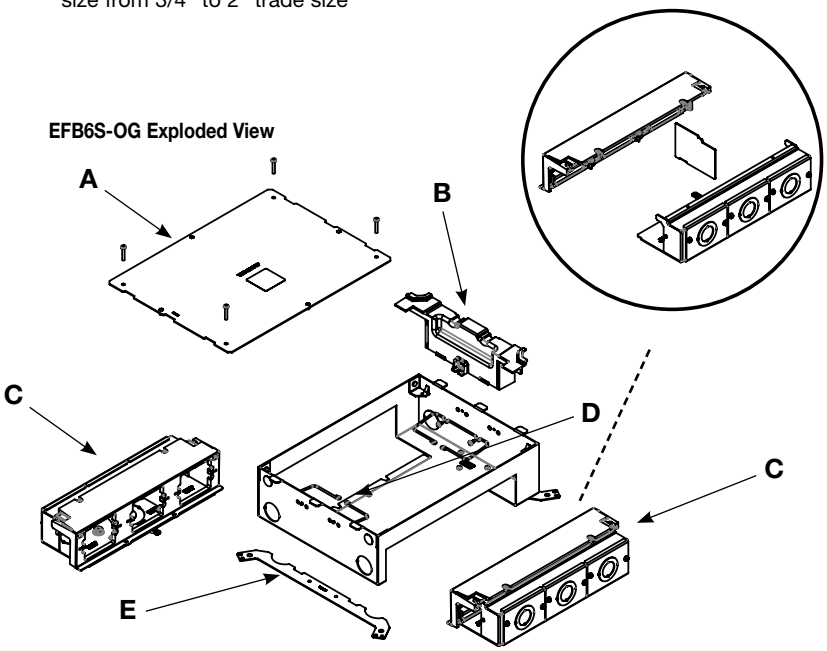

EFB6S-OG Depth Behind Plates

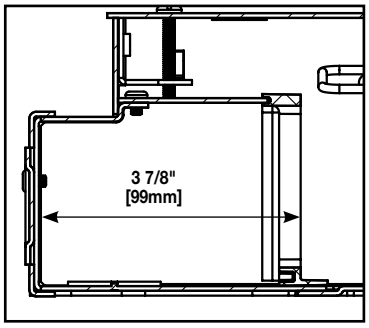

EFB6S-OG Knockout locations & Sizes

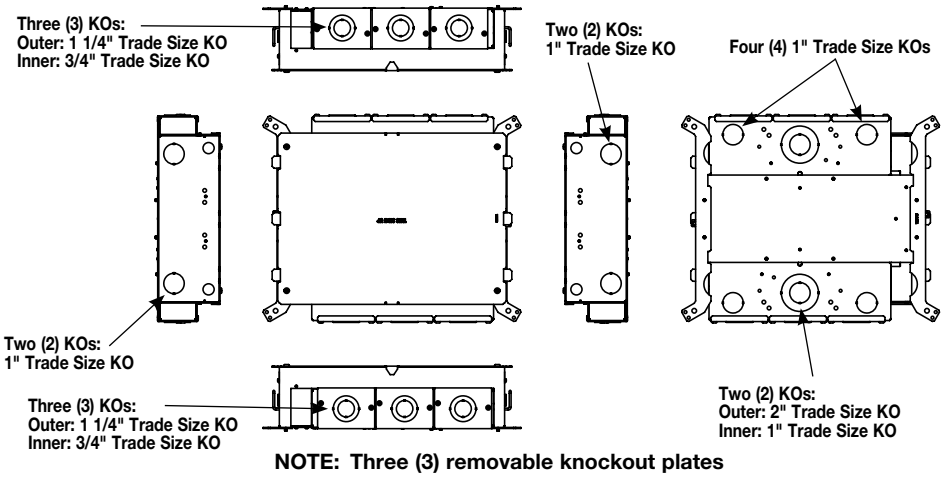

NOTE: Three (3) removable knockout plates per side allow for the EFB6S-2HUB 2" conduit adapter to be installed.

Evolution Series 6-Gang Floor Box Accessories Ordering Information

Catalog No./Item	Description/Specifications
EFB6M 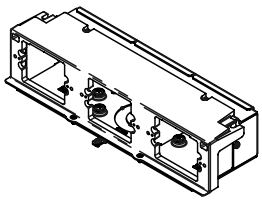	**Module –** Bank of three (3) compartments that accept power, communications and audio/video devices. Accepts standard size (2 3/4" x 4 1/2" [70mm x 114mm]) device plates. Includes device bracket, back plate, three (3) knockout plates (3/4"/1 1/4" concentric), two (2) end caps and one (1) divider. **Country of Origin: USA**
NOTE: Module will fit on either side of the floor box.	
EFB6-MB 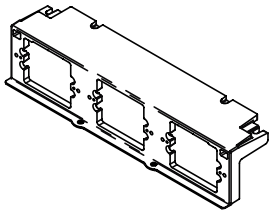	**Mounting Bracket –** hold up to three (3) devices of power, communications or audio/video devices. Bracket accepts standard size (2 3/4" x 4 1/2" [70mm x 114mm]) device plates sold separately by others. **Country of Origin: USA**
EFB-AAP 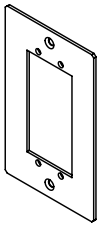	**Device Plate –** holds 2 Extron® Electronics AAP devices. Device plate dimensions: 2 3/4" x 4 1/2" [69mm x 114mm]. **Country of Origin: USA**
EFB-MAAP 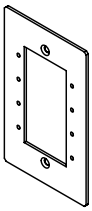	**Device Plate –** holds 4 Extron® Electronics MAAP devices. Device plate dimensions: 2 3/4" x 4 1/2" [69mm x 114mm]. **Country of Origin: USA**
EFB-MOS 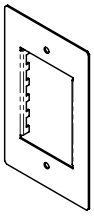	**Device Plate –** European device plate accepts up to [45mm x 67.5mm] Arteor device. Device plate dimensions: 2 3/4" x 4 1/2" [69mm x 114mm]. **Country of Origin: USA**
EFB-B 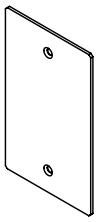	**Blank Device Plate** – Device plate dimensions: 2 3/4" x 4 1/2" [69mm x 114mm]. **Country of Origin: USA**

Catalog No./Item	Description/Specifications
EFB6-3/4 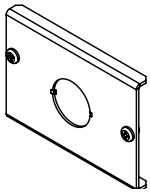	**Knockout Plate** – Has one (1) 3/4" trade size knockout. **Country of Origin: USA**
EFB6-3/4-11/4 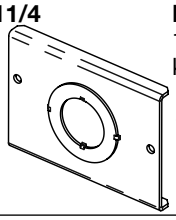	**Knockout Plate** – Has one (1) 1 1/4" concentric trade size knockout opening. **Country of Origin: USA**
EFB6-11/4 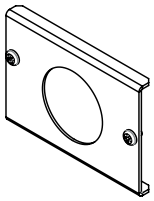	**Knockout Plate** – Has one (1) 1 1/4" trade size knockout. **Country of Origin: USA**
EFB6-TUN 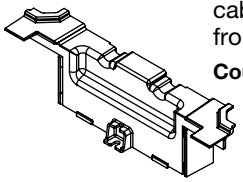	**Tunnel** – 6 gang tunnel allows for cables to be wrapped around box from one module to the other. **Country of Origin: USA**
EFB6-DIV 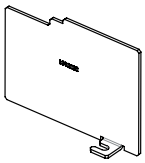	**Relocatable Divider** – Provides separation of services. Includes one (1) divider plate. **Country of Origin: USA**
EFBCLL 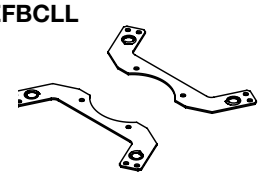	**Concrete Leveling Legs** – Provide floor box adjustment up or down to match the desired pour height of the concrete. Included two (2) leveling legs, threaded rod not supplied. **Country of Origin: USA**
EFBCMG 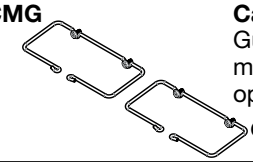	**Cable Management Guides** – Guides help organize and maintain cable position when opening and closing the cover. **Country of Origin: USA**
EFB6S-2HUB 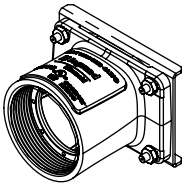	**2" Conduit Hub** – Hub allows 2" conduit to be fed into the back of EFB6S and EFB6S-OG Floor Boxes. Maximum of six (6) hubs per box. **Country of Origin: USA**

Evolution Series EFB8 Floor Box Ordering Information

Catalog No./Item	Description/Specifications

EFB8S

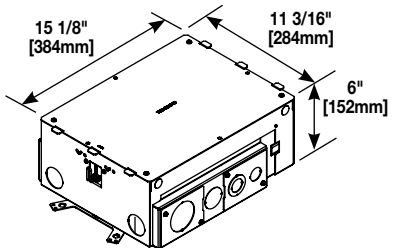

NOTE: For use on bare (polished) concrete or terrazzo floors EFB610-CTR must be used. (Sold separately.)

Items not included with the box and sold separately:

- Receptacles,
- Communication Jacks
- A/V Devices
- Device plates.

8-Gang Floor Box – has been designed to be installed in concrete floors, raised floors, & wood floor applications. Box has a fully finished interior to assist plugging and unplugging of devices. Designed to work with standard size wall plates.
Box comes complete with all components needed for initial installation.
Box is compatible with Wiremold® Walkerflex Modular Wiring System.
Custom options are available upon request.

Country of Origin: USA

Components Included:

- **A** Protective/Disposable Cover
- **B** Tunnel System for connecting the two modules of compartments
- **C** Two (2) Removable Modules
- **D** Two (2) Toggle Clamps to secure box to raised and wood floors
- **E** Two (2) Cable Management Guides
- **F** Two (2) Leveling Support Legs for concrete applications
- **G** Trade Size Knockouts ranging in size from 3/4" to 2" trade size
- **H** Two (2) "L" Brackets

Each Module Consists of:

- One (1) EFB8S-MB Mounting Bracket
- One (1) Back Plate
- Two (2) End Caps
- One (1) EFB8S-DIV Divider
- One (1) 2" Trade Size Knockout Plate
- One (1) 1 1/4"/3/4" Concentric Trade Size Knockout Plate

EFB8S Exploded View

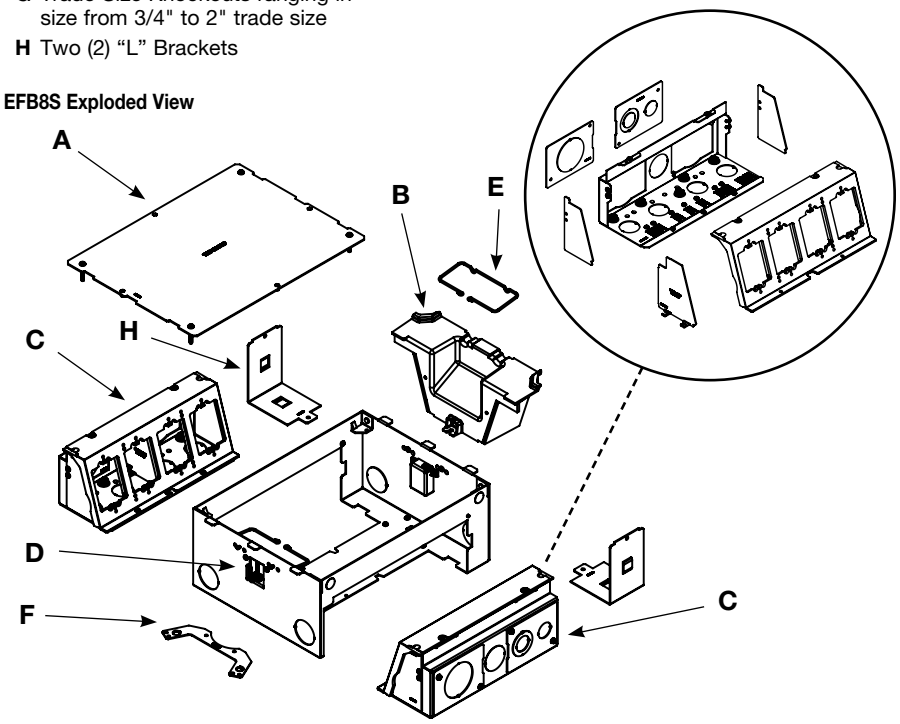

EFB8S Depth Behind Plates

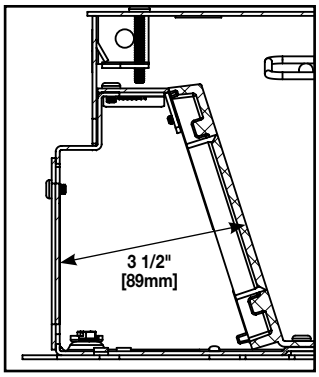

EFB8S Knockout locations & Sizes

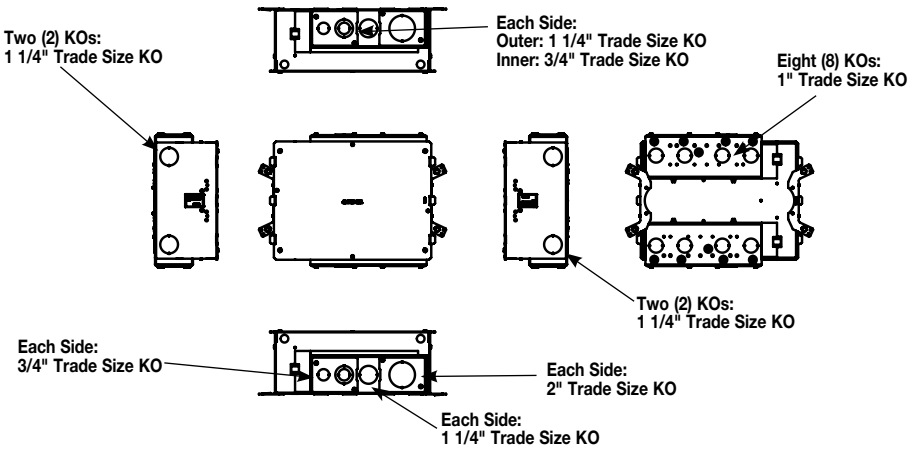

Evolution Series EFB8 Floor Box Ordering Information

Catalog No./Item	Description/Specifications
EFB8S-OG	**8-Gang Floor Box –** has been designed to be installed in both on-grade and above grade concrete floor applications. Box has an epoxy coating that allows the box to be placed in on-grade applications without the need for additional vapor barriers. Designed to work with standard size wall plates. **Box comes complete with all components needed for initial installation.** Custom options are available upon request.

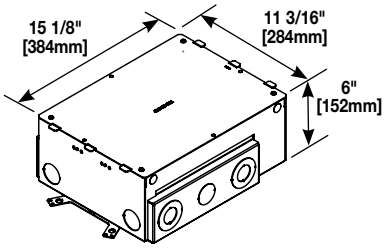

Country of Origin: USA

NOTE: For use on bare (polished) concrete or terrazzo floors EFB610-CTR must be used. (Sold separately.)

Components Included:

- **A** Protective/Disposable Cover
- **B** Tunnel System for connecting the two modules of compartments
- **C** Two (2) Removable Modules
- **D** Two (2) Cable Management Guides
- **E** Two (2) Leveling Support Legs for concrete applications
- **F** Trade Size Knockouts ranging in size from 3/4" to 2" trade size

Each Module Consists of:

- One (1) EFB8S-MB Mounting Bracket
- One (1) Back Plate
- One (1) EFB8S-DIV Divider

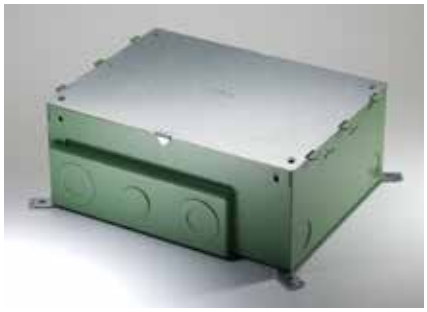

Items not included with the box and sold separately:

- Receptacles,
- Communication Jacks
- A/V Devices
- Device plates.

EFB8S-OG Exploded View

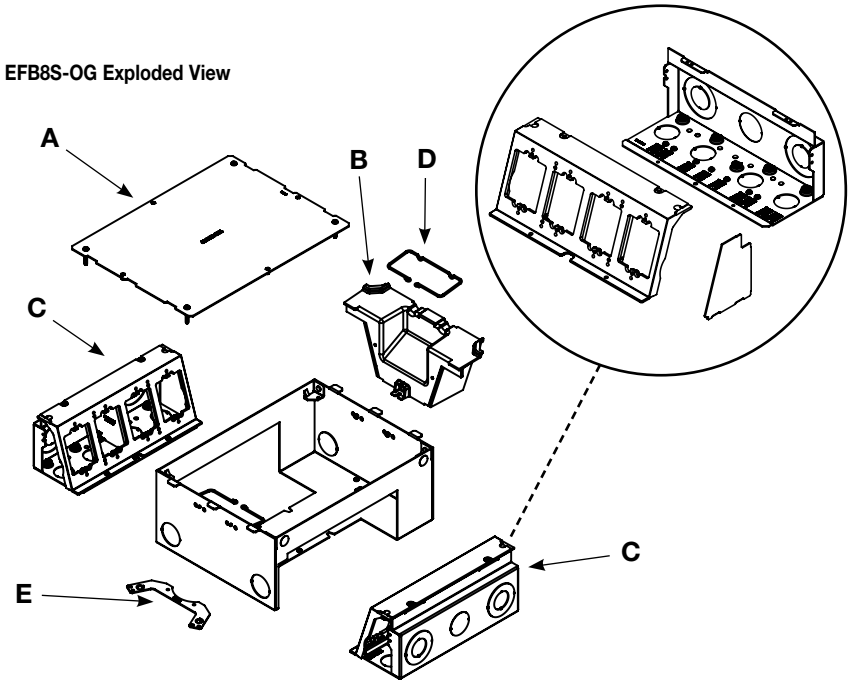

EFB8S-OG Depth Behind Plates

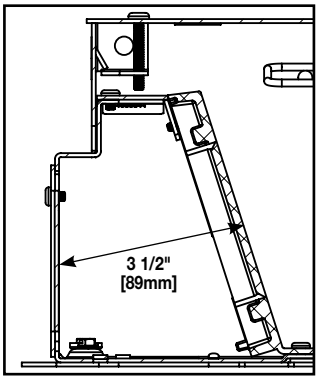

EFB8S-OG Knockout locations & Sizes

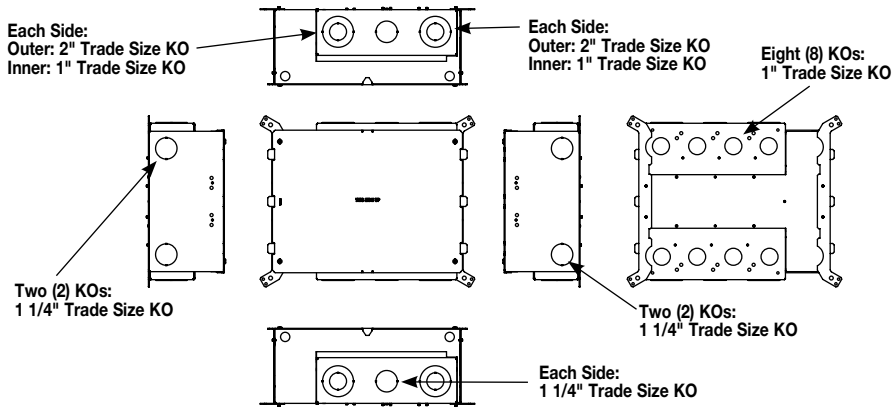

Evolution Series 8-Gang Floor Box Accessories Ordering Information

Catalog No./Item	Description/Specifications
EFB8-MB	**Mounting Bracket –** holds up to four (4) devices for power, communications or audio/video. Bracket accepts standard size (2 3/4" x 4 1/2" [70mm x 114mm]) device plates sold separately by others. **Country of Origin: USA**
EFB8-22GMB	**Mounting Bracket** – Equipped with two (2) 2-gang standard size device openings for a standard 2-gang (4 9/16" x 4 1/2" [116mm x 114mm]). Ideal for 2-gang A/V devices such as Crestron® 2-gang digital media devices. Device plates and devices supplied by others. **Country of Origin: USA**
EFB8-4GMB	**Mounting Bracket –** Holds a standard 4 gang device plate. Device plate dimensions: 8 1/8" x 4 1/4" [206mm x 116mm]. **Country of Origin: USA**
EFB-AAP	**Device Plate –** holds two (2) Extron® Electronics AAP devices. Device plate dimensions: 2 3/4" x 4 1/2" [69mm x 114mm]. **Country of Origin: USA**
EFB-MAAP	**Device Plate –** holds four (4) Extron® Electronics MAAP devices. Device plate dimensions: 2 3/4" x 4 1/2" [69mm x 114mm]. **Country of Origin: USA**
EFB-MOS	**Device Plate –** European device plate accepts up to [45mm x 67.5mm] Arteor device. Device plate dimensions: 2 3/4" x 4 1/2" [69mm x 114mm]. **Country of Origin: USA**
EFB-B	**Blank Device Plate** – Device plate dimensions: 2 3/4" x 4 1/2" [69mm x 114mm]. **Country of Origin: USA**

Catalog No./Item	Description/Specifications
EFB810-3/4-3/4	**Knockout Plate** – Has two (2) 3/4" trade size knockouts. **Country of Origin: USA**
EFB810-3/4-11/4	**Knockout Plate** – Has one 3/4" and one 3/4"/1 1/4" concentric trade size knockout. **Country of Origin: USA**
EFB810-2	**Knockout Plate** – Has one 2" trade size knockout. **Country of Origin: USA**
EFB810-TUN	**Tunnel** – For EFB8 Series and EFB10 Series boxes. Tunnel allows cables to be wrapped around box from one module to the other. **Country of Origin: USA**
EFB810-DIV	**Relocatable Divider** – Provides separation of services. Includes one divider plate. **Country of Origin: USA**
EFBCLL	**Concrete Leveling Legs** – Legs allow floor box to be adjusted up or down to match the desired pour height of the concrete. Includes two (2) leveling legs. Threaded rod not supplied. **Country of Origin: USA**

Evolution Series 8-Gang Floor Box Accessories Ordering Information (continued)

Catalog No./Item	Description/Specifications
EFBCMG 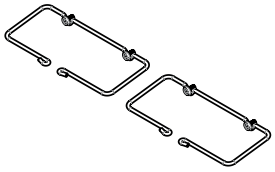	**Cable Management Guides** – Guides help organize and maintain cable position when opening and closing the cover. **Country of Origin: USA**

Catalog No./Item	Description/Specifications
EFB-50A 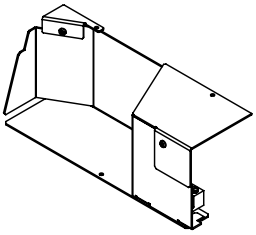	**50A Adapter** – Allows for a 50A device to be installed on the 8-gang and 10-gang series boxes. **Country of Origin: USA** **NOTE: Only fits on othe side of the floor box where the device is facing the tunnel.** 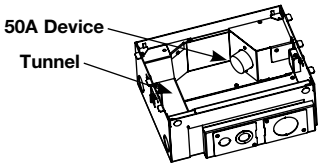

Evolution Series EFB10 Floor Box Ordering Information

Catalog No./Item	Description/Specifications

EFB10S

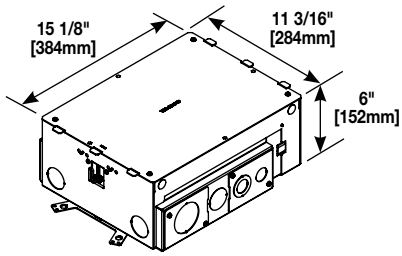

NOTE: For use on bare (polished) concrete or terrazzo floors EFB610-CTR must be used. (Sold separately.)

Items not included with the box and sold separately:

- Receptacles,
- Communication Jacks
- A/V Devices
- Device plates.

10-Gang Floor Box – has been designed to be installed in concrete floors, raised floors, & wood floor applications. Box has a fully finished interior to assist plugging and unplugging of devices. **Box comes complete with all components needed for initial installation.** Box is compatible with Wiremold® Walkerflex Modular Wiring System. Custom options are available upon request.

Country of Origin: USA

Components Included:

- **A** Protective/Disposable Cover
- **B** Tunnel System for connecting the two modules of compartments
- **C** Two (2) Removable Modules
- **D** Two (2) Toggle Clamps to secure box to raised and wood floors
- **E** Two (2) Cable Management Guides
- **F** Two (2) Leveling Support Legs for concrete applications
- **G** Trade Size Knockouts ranging in size from 3/4" to 2" trade size
- **H** Two (2) "L" Brackets

Each Module Consists of:

- One (1) EFB10S-MB Mounting Bracket
- One (1) Back Plate
- Two (2) End Caps
- One (1) EFB10S-DIV Divider
- One (1) 2" Trade Size Knockout Plate
- One (1) 1 1/4"/3/4" Concentric Trade Size Knockout Plate

EFB10S Exploded View

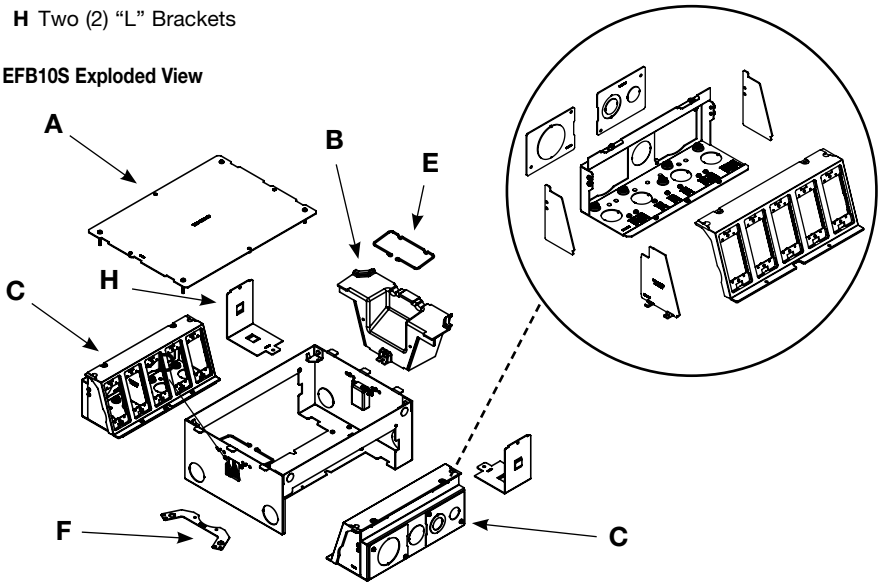

EFB10S Depth Behind Plates

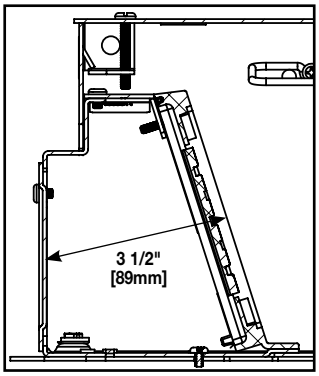

EFB10S Knockout locations & Sizes

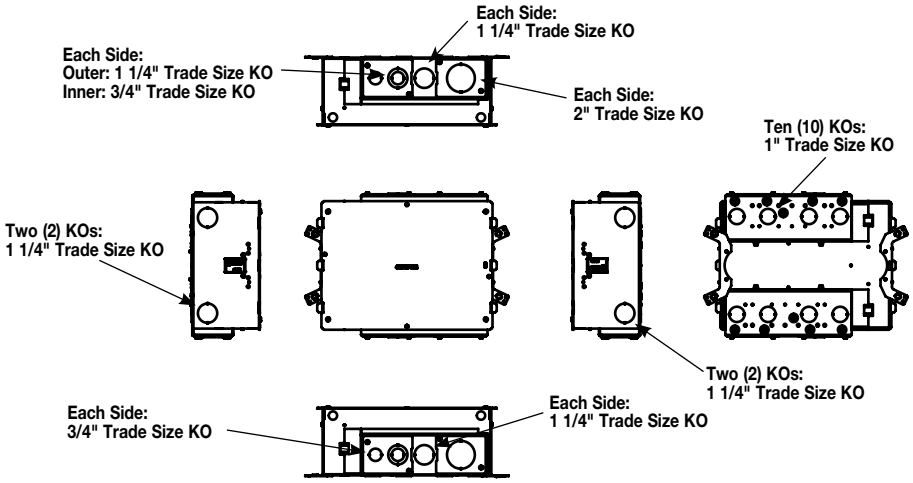

Evolution Series EFB10 Floor Box Ordering Information

Catalog No./Item	Description/Specifications
EFB10S-OG	**10-Gang Floor Box –** has been designed to be installed in both on-grade and above grade concrete floor applications. Box has an epoxy coating that allows the box to be placed in on-grade applications without the need for additional vapor barriers. **Box comes complete with all components needed for initial installation.** Custom options are available upon request.

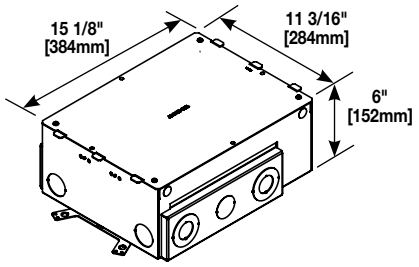

NOTE: For use on bare (polished) concrete or terrazzo floors EFB610-CTR must be used. (Sold separately.)

Country of Origin: USA

Components Included:

- **A** Protective/Disposable Cover
- **B** Tunnel System for connecting the two modules of compartments
- **C** Two (2) Removable Modules
- **D** Two (2) Cable Management Guides
- **E** Two (2) Leveling Support Legs for concrete applications
- **F** Trade Size Knockouts ranging in size from 3/4" to 2" trade size

Each Module Consists of:

- One (1) EFB10S-MB Mounting Bracket
- One (1) Back Plate
- One (1) EFB10S-DIV Divider

Items not included with the box and sold separately:

- Receptacles,
- Communication Jacks
- A/V Devices
- Device plates.

EFB10S-OG Exploded View

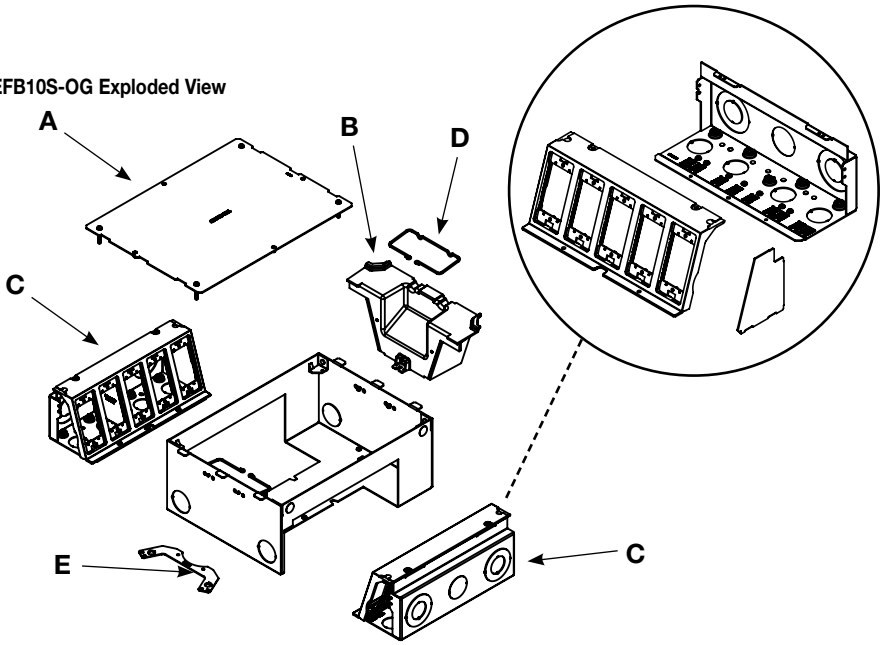

EFB10S-OG Depth Behind Plates

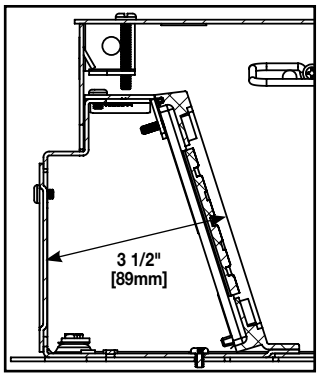

EFB10S-OG Knockout locations & Sizes

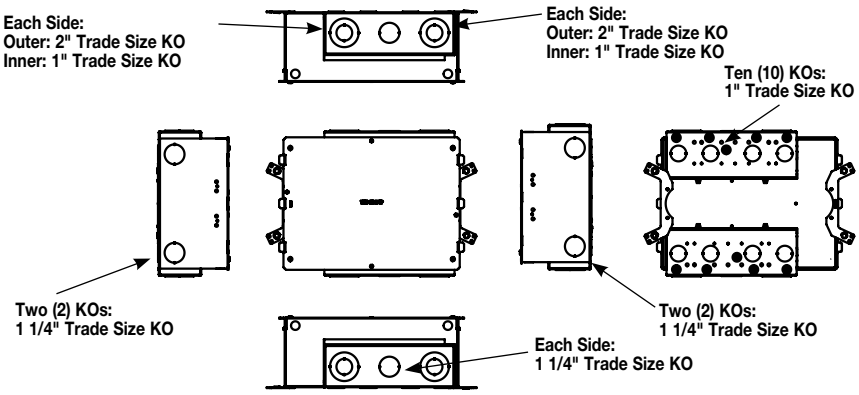

Evolution Series 10-Gang Floor Box Accessories Ordering Information

Catalog No./Item	Description/Specifications
EFB10-MB 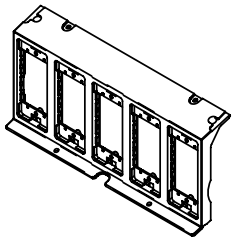	**Mounting Bracket –** hold up to five (5) devices for power, communications or audio/video. Bracket accepts EFB10 Series device plates (2 1/32" x 4 5/8") [58mm x 117mm] device plates sold separately. **Country of Origin: USA**
EFB10-23GMB 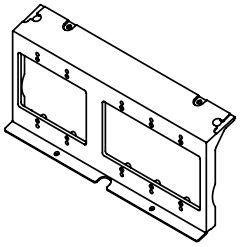	**Mounting Bracket** – Equipped with one 2-gang standard size device opening and one 3-gang standard size device opening. Accepts a standard 2-gang (4 9/16" x 4 1/2" [116mm x 114mm]) and a 3-gang (6 3/8" x 4 1/2" [162mm x 114mm]) device plate. Ideal for 2-gang A/V devices such as Crestron® 2-gang and 3-gang digital media devices. Device plates and devices supplied by others. **Country of Origin: USA**
EFB10-5GMB 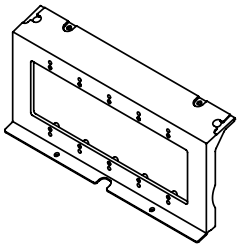	**Mounting Bracket** – Holds a standard 5 gang device plate Device plate dimensions: 10" x 4 1/2" [254mm x 116mm]. **Country of Origin: USA**
EFB10-B 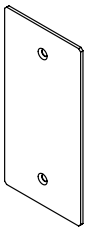	**Blank Device Plate –** Device plate dimensions: 2.3" x 4.652" [58mm x 118mm]. **Country of Origin: USA**
EFB10-DP 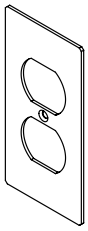	**Duplex Device Plate –** Device plate dimensions: 2.3" x 4.652" [58mm x 118mm]. Includes receptacle spacers. **Country of Origin: USA**

Catalog No./Item	Description/Specifications
EFB10-DEC 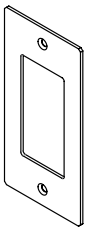	**Decorator Style Device Plate –** For use with decorator style receptacles, GFCI receptacle, and decorator style audio/video devices. Device plate dimensions: 2.3" x 4.652" [58mm x 118mm]. Includes receptacle spacers. **Country of Origin: USA**
EFB10-S1 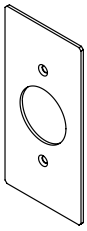	**Knockout Plate** – Single receptacle 1.39" [35mm]. diameter. Device plate dimensions: 2.3" x 4.652" [58mm x 118mm]. Includes receptacle spacers. **Country of Origin: USA**
EFB10-S2 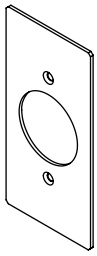	**Knockout Plate** – Single receptacle 1.59" [40mm]. diameter. Device plate dimensions: 2.3" x 4.652" [58mm x 118mm]. Includes receptacle spacers. **Country of Origin: USA**
EFB10-6AB 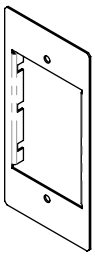	**Device Plate** – Accepts up to three (3) dual Wiremold Open System communication adapters. Adapters sold separately. Device plate dimensions: 2.3" x 4.652" [58mm x 118mm]. **Country of Origin: USA**
EFB10-3S2 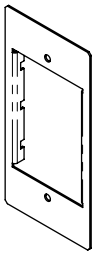	**Device Plate** – Accepts up to three (3) Ortronics® Series II devices. Ortronics® devices sold separately. Device plate dimensions: 2.3" x 4.652" [58mm x 118mm]. **Country of Origin: USA**
EFB10-2C 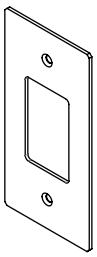	**Device Plate** – Accepts one dual Wiremold Open System adapter, or one Ortronics® Series II adapter, or one Ortronics® TracJack adapter. Adapters sold separately. Device plate dimensions: 2.3" x 4.652" [58mm x 118mm]. **Country of Origin: USA**

Evolution Series 10 Gang Floor Box Accessories Ordering Information (continued)

Catalog No./Item	Description/Specifications
EFB10-AAP 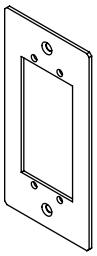	**Device Plate –** holds two (2) Extron® Electronics AAP devices. Device plate dimensions: 2.3" x 4.652" [58mm x 118mm]. **Country of Origin: USA**
EFB10-MAAP 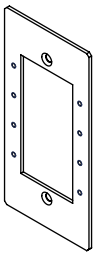	**Device Plate –** holds four (4) Extron® Electronics MAAP devices. Device plate dimensions: 2.3" x 4.652" [58mm x 118mm]. **Country of Origin: USA**
EFB10-MOS 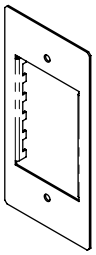	**Device Plate –** [45mm x 67.5mm] device plate. Device plate dimensions: 2.3" x 4.652" [58mm x 118mm]. **Country of Origin: USA**
5507B-WH 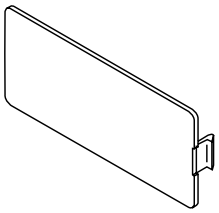	**Blank Faceplate** – For covering unused compartments in the device bracket. **Country of Origin: USA**
5507D-WH 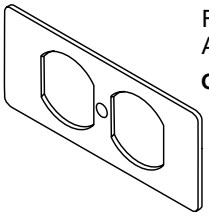	**Duplex Receptacle Faceplate** – For covering duplex style devices. Accepts 106 frame. **Country of Origin: USA**
5507R-WH 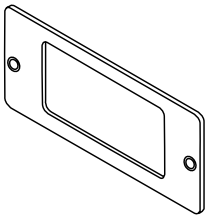	**Rectangular Receptacle Faceplate** – For covering rectangular decorator style devices. **Country of Origin: USA**

Catalog No./Item	Description/Specifications
5507S-WH 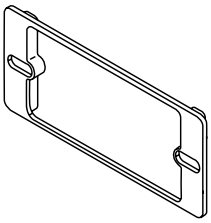	**Rectangular Spacer** – For mounting commercial device plates. Installs between the device bracket and a device. **Country of Origin: USA**
5507T1-WH 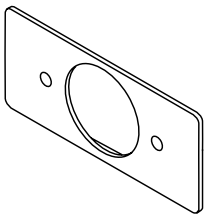	**Single Receptacle Faceplate** – For covering single receptacles – 1.59" [40mm] in diameter. **Country of Origin: USA**
5507T2-WH 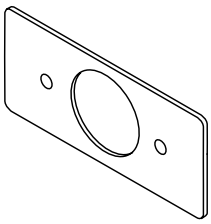	**Single Receptacle Faceplate** – For covering single receptacles – 1.41" [36mm] in diameter. **Country of Origin: USA**
55074TJ-WH 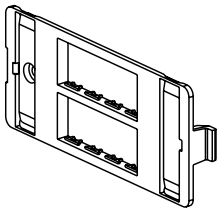	**Ortronics® Faceplate** – For mounting Ortronics® datacom inserts. Accepts four (4) TracJack devices. **Country of Origin: USA**
55076TJ-WH 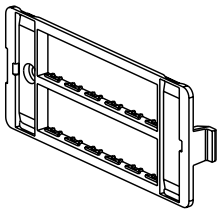	**Ortronics® Faceplate** – For mounting Ortronics® datacom inserts. Accepts six (6) TracJack devices. **Country of Origin: USA**
EFB810-3/4-3/4 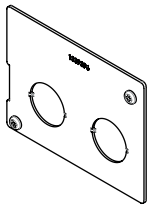	**Knockout Plate** – Has two (2) 3/4" trade size knockouts. **Country of Origin: USA**

Evolution Series 10 Gang Floor Box Accessories Ordering Information (continued)

Catalog No./Item	Description/Specifications
EFB810-3/4-11/4 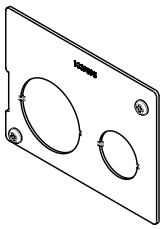	**Knockout Plate** – Has one 3/4" and one 3/4"/1 1/4" concentric trade size knockout. **Country of Origin: USA**
EFB810-2 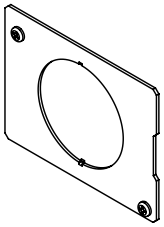	**Knockout Plate** – Has one 2" trade size knockout. **Country of Origin: USA**
EFB810-TUN 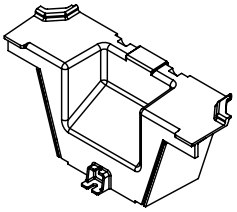	**Tunnel** – For EFB8 Series and EFB10 Series boxes. Tunnel allows cables to be wrapped around box from one module to the other. **Country of Origin: USA**
EFB810-DIV 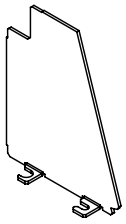	**Relocatable Divider** – Provides separation of services. Includes one divider plate. **Country of Origin: USA**

Catalog No./Item	Description/Specifications
EFBCLL 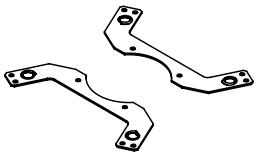	**Concrete Leveling Legs** – Legs allow floor box to be adjusted up or down to match the desired pour height of the concrete. Includes two (2) leveling legs. Threaded rod not supplied. **Country of Origin: USA**
EFBCMG 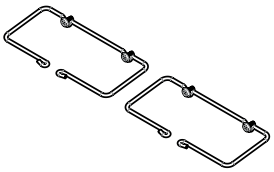	**Cable Management Guides** – Guides help organize and maintain cable position when opening and closing the cover. **Country of Origin: USA**
EFB-50A 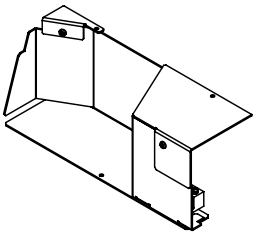	**50A Adapter** – Allows for a 50A device to be installed on the 8 gang and 10 gang series boxes. **Country of Origin: USA** **NOTE: Only fits on othe side of the floor box where the device is facing the tunnel.** 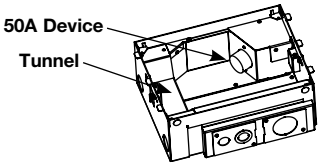

Evolution Series Floor Box Accessories Ordering Information

Catalog No./Item	Description/Specifications
EFB610CTCBK **EFB610CTCGY** **EFB610CTCBS** **EFB610CTCNK** **EFB610CTCBZ** 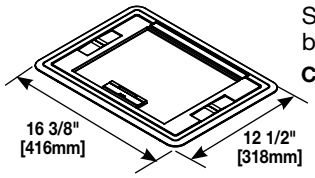	**Surface Style Cover with Carpet Insert –** Die cast aluminum cover assembly designed to be used on top of the floor covering. Available in the following powder coated finishes: black (BK), gray (GY), brass (BS), nickel (NK) and bronze (BZ). For use on Evolution Series 6-, 8- and 10-gang floor boxes (EFB6, EFB8 and EFB10). **Country of Origin: India** **NOTE: Depth of recess area in plate is 1/4" [6.35mm].**
EFB610CTBK **EFB610CTGY** **EFB610CTBS** **EFB610CTNK** **EFB610CTBZ** 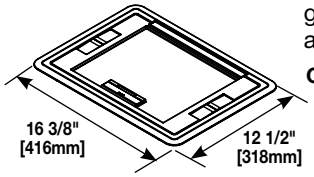	**Flush Style Cover with Carpet Insert –** Die cast aluminum cover assembly designed to be used level (flush) with finish floor covering. Available in the following powder coated finishes: black (BK), gray (GY), brass (BS), nickel (NK) and bronze (BZ). For use on Evolution Series 6-, 8- and 10-gang floor boxes (EFB6, EFB8 and EFB10). **Country of Origin: India** **NOTE: Depth of recess area in plate is 1/4" [6.35mm].**
EFB610BTCBK **EFB610BTCGY** **EFB610BTCBS** **EFB610BTCNK** **EFB610BTCBZ** 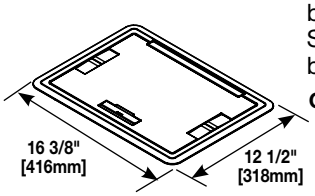	**Surface Style Cover with Solid Lid –** Die cast aluminum cover assembly designed to be used on top of floor covering. Available in the following powder coated finishes: black (BK), gray (GY), brass (BS), nickel (NK) and bronze (BZ). For use on Evolution Series 6-, 8- and 10-gang floor boxes (EFB6, EFB8 and EFB10). **Country of Origin: India**

Catalog No./Item	Description/Specifications
EFB610BTBK **EFB610BTGY** **EFB610BTBS** **EFB610BTNK** **EFB610BTBZ** 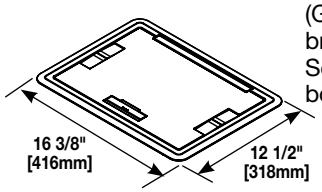	**Flush Style Cover with Solid Lid –** Die cast aluminum cover assembly designed to be used on top of floor covering. Available in the following powder coated finishes: black (BK), gray (GY), brass (BS), nickel (NK) and bronze (BZ). For use on Evolution Series 6-, 8- and 10-gang floor boxes (EFB6, EFB8 and EFB10). **Country of Origin: India**
EFB610CTR 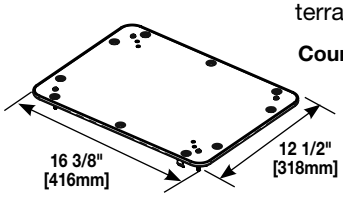	**Bare Concrete/Terrazzo Trim Ring** – Nonmetallic ring for use with bare concrete and terrazzo floor applications. **Country of Origin: USA** **NOTE: Ring must be attached to the floor box before pouring concrete or terrazzo.**
EFB610-TS 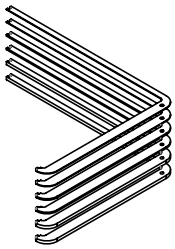	**Tile Shim** – Used for floor coverings greater than 3/16" [4.7mm]. The EFB610-TS allows the finished cover assembly to be flush with the finished floor. Includes one (1) 1/16" [1.6mm], one (1) 1/8" [3.2mm] and one 1/4" [6.4mm] tile shims for 7/16" [11.1mm] of upward adjustment. **Country of Origin: USA**
EFB-Template 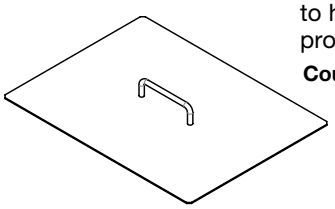	**Floor Box Template** – Designed to help mark out floor to insure a proper fit. **Country of Origin: USA**

Load Capacities for Evolution Series Floor Box Cover Assemblies

CATALOG NUMBERS	MAXIMUM LOAD IN POUNDS
EFB610BTC Series	1800
EFB610CTC Series	1800
EFB610BT Series	1800
EFB610CT Series	1800

NOTE: Load applied through a 3" [76mm] mandrel in center of the cover.
Loads above are static loads only and do not pertain to rolling loads.

Evolution Series Floor Box Covers are available in powder coated finishes of: (L to R) gray, nickel, bronze, brass and black.

Evolution Series EFBFF Furniture Feed Floor Box Ordering Information

Catalog No./Item	Description/Specifications
EFBFF	**2-Gang Furniture Feed Floor Box Assembly –** For carpet, tile and wood covered floors. For use in concrete, raised and wood floor applications. Box is provided with a protective, disposable cover that allows the box to be installed at any point in the construction process. Box is available in a standard version for use in above grade concrete, raised, and wood floor applications. Boxes are also compatible with Wiremold® Walkerflex Modular Wiring System. Custom options are available upon request. **Country of Origin: USA**

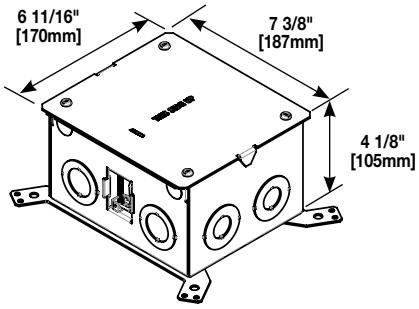

NOTE: For use with bare concrete or terrazzo floors. Use FP-CTR Trim Ring.

NOTE: Box is divided down center to allow for separation between power and communication or A/V services.

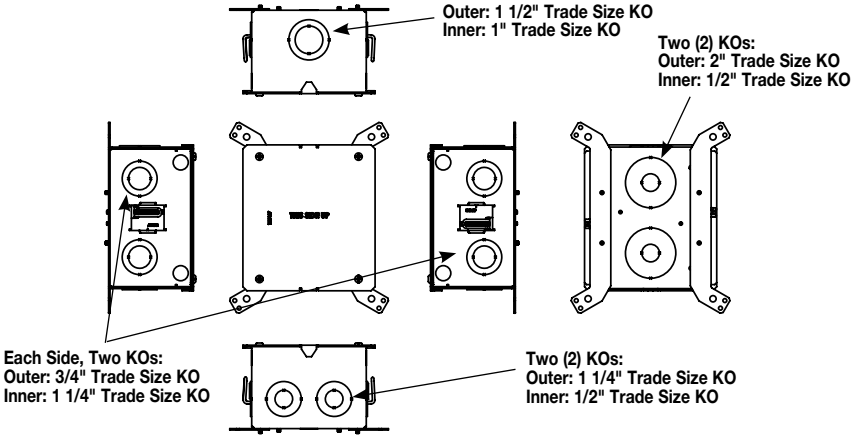

Evolution Series EFBFF Furniture Feed Floor Box Ordering Information (continued)

Catalog No./Item	Description/Specifications
EFBFF-OG	**2-Gang Furniture Feed Floor Box Assembly –** For carpet, tile and wood covered floors. For use in on-grade and above grade concrete floor applications. Box is provided with a protective, disposable cover that allows the box to be installed at any point in the construction process. Box is available with an epoxy coating for on-grade applications. Custom options are available upon request. **Country of Origin: USA**

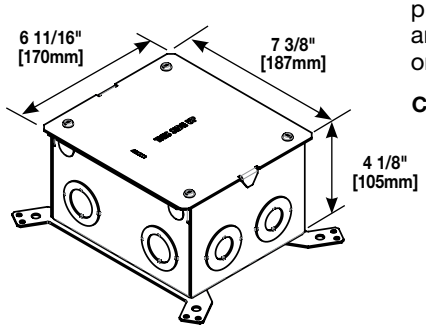

NOTE: For use with bare concrete or terrazzo floors. Use FP-CTR Trim Ring.

NOTE: Box is divided down center to allow for separation between power and communication or A/V services.

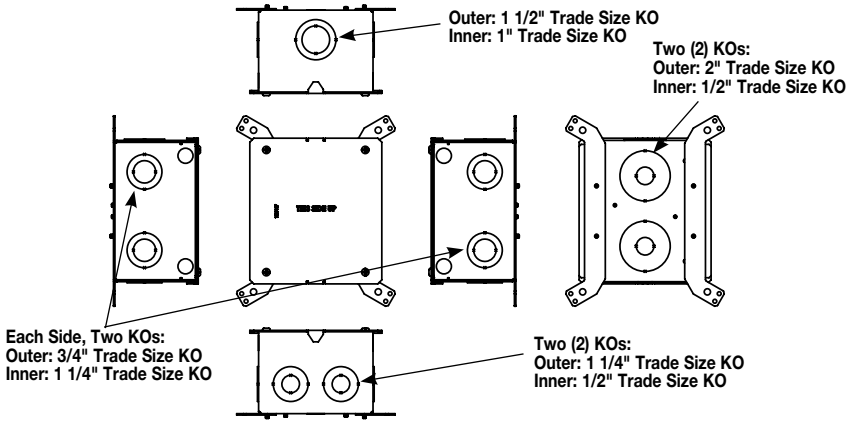

Evolution Series EFBFF Furniture Feed Floor Box Ordering Information (continued)

Catalog No./Item	Description/Specifications
EFBFF-DIV 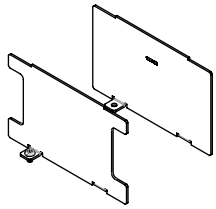	**Divider –** Provides separation of services. **Country of Origin: USA**
FP-CTR 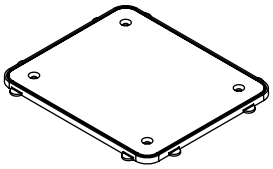	**Bare Concrete & Terrazzo Ring –** Nonmetallic ring for use on bare polished concrete and terrazzo floor applications. **Country of Origin: USA** **NOTE: Ring must be attached to the floor box before pouring concrete or terrazzo.**
EFBFF-CLL 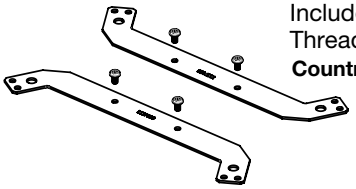	**Concrete Leveling Legs** – Legs allow floor box to be adjusted up or down to match the desired pour height of the concrete. Includes two (2) leveling legs. Threaded rod not supplied. **Country of Origin: USA**

Catalog No./Item	Description/Specifications
FPFFTCBK **FPFFTCBZ** **FPFFTCGY** **FPFFTCNK** **FPFFTCAL**	**Furniture Feed Cover Assembly –** Flanged cover for use in tile or carpet or wood floor installations. Die-cast aluminum assembly available in powder coat finishes of black (BK), bronze (BZ), brass (BS),nickel (NK), gray (GY), or brushed aluminum (AL). Provided with one 1" trade size screw plug for power or communication type cabling and one combination 1 1/4" and 2" trade size screw plug for communication and A/V type cabling. Allows for feeding both power and communication cabling. **Country of Origin: USA** 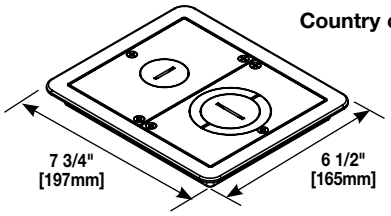 **NOTE: Flangeless FloorPort Series (FPFFT) covers are not designed to work with Evolution Series Furniture Feed Floor Boxes.**

NOTES

NOTE: All brand and product names referenced in this document are registered trademarks or trademarks of their respective holders.

NOTE: The paper used to print this document is an environmentally responsible paper with 10% post consumer waste, with FSC and SFI Chain of Custody certifications, Lacey Act complaint. 100% of the electricity used to manufacture Flo sheets is generated with Green-e certified renewable energy.

Electrical Wiring Systems
60 Woodlawn Street
West Hartford, CT 06110
Phone: 1.877.BY.LEGRAND (295-3472)
www.legrand.us

Canada
Phone:905.738.9195
www.legrand.ca

ED1662R7 – Updated February 2018 – For latest specs visit www.legrand.us/wiremold

© Copyright 2018 Legrand All Rights Reserved